2009 AST 40th Anniversary Conference
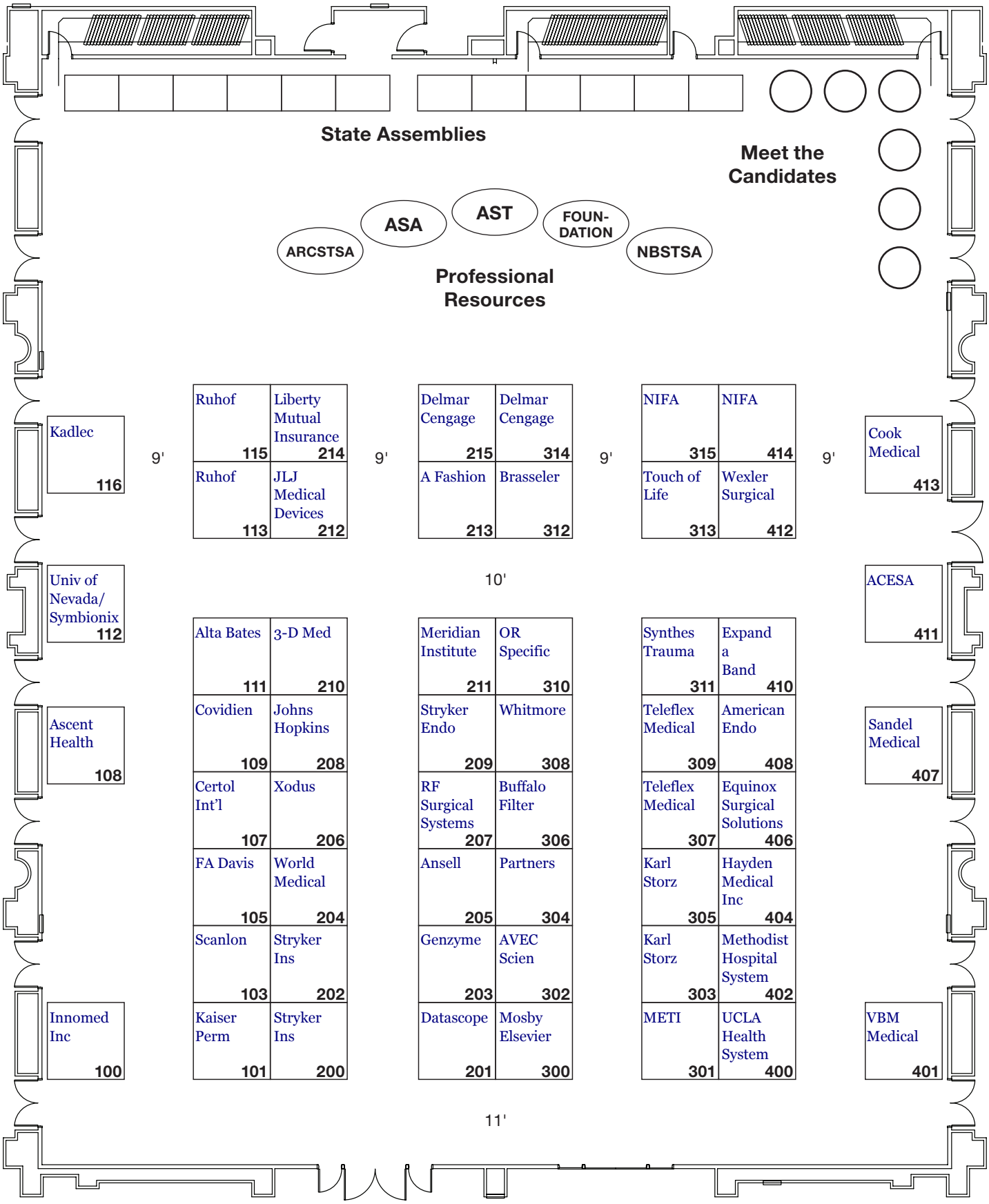
Caesars Palace Exhibit Hall Floorplan