Arthroscopic Anterior Cruciate Ligament Reconstruction

ARTICLE BY GARY ALLEN, CST/CFA

The knee's role in weight-bearing activities subjects it to considerable stress. Unfortunately, this joint also experiences a variety of aberrant movement and trauma. Such forces ultimately adversely affect the components of the knee, including the anterior cruciate ligament (ACL). Consequently, procedures have been developed to correct structural injuries of the knee and the ACL has become the subject of intense study.[1]

Two parallel developments occurred in orthopedics in the 1970s that provided a new direction for ACL reconstruction: sports medicine emerged as a specialty and arthroscopic surgery was introduced.[2] Now recognized as the most common knee injury in athletics, the resolution of ACL rupture is being realized through arthroscopic technique.[1]

This article is intended to provide an overview of a procedure that is rapidly gaining popularity within the orthopedic community: ACL reconstruction. In the course of presentation, the following subject areas will be discussed: relevant anatomy, history of ACL reconstructive efforts, indications for ACL repair, types of grafts used, the patient's intraoperative experience, complications, and rehabilitation. A general knowledge of anatomy, arthroscopy, and medical terminology is presumed of the reader.

The history of ACL reconstruction has acknowledged the ligament to be an important structure in the knee. With its limited intervention, arthroscopic ACL reconstruction has virtually replaced extra-articular approaches. This conservative approach is gaining recognition and is indicative of the dynamic nature of surgery, of which the surgical technologist should be aware.

History

The first extra-articular ACL reconstruction, in which a proximally based strip of iliotibial band was used, was reported by Hey Groves in 1917.[1] In 1926, Bennett described a procedure utilizing a free strip of fascia.[3] In the 1930s, emphasis shifted to reconstructing the medial collateral ligament (MCL) in the belief that stability would be reestablished in the ACL-deficient knee.[3]

In 1936 and 1939, Campbell described intra-articular routing of a graft.[1] Palmer advanced the biomechanics of ACL injuries in 1938, and was the first to discuss the "drawer sign" (refer to section on diagnosis).[1] In 1947, Hauser premiered a patellar tendon graft.[3]

The 1950s brought studies by Augustine, O'Donoghue, and Lindstrom who separately tested semitendinosus, gracilis, and meniscal ACL substitutes.[3] In 1963, Jones used a graft composed of central third patellar tendon with an attached wedge of patellar bone.[1] In 1972, McIntosh et al described "pivot shift" (refer to section on diagnosis) as best defining ACL deficiency.[1] Franke, in 1976, described a free transplant graft of patellar tendon with tibial and patellar bone, which Clancy, in 1982, modified to the mid-third portion of tendon.[3] A similar graft is discussed in this article.

Anatomy

Knee stability is conferred by ligaments and tendons joining the tibia and femur.[1] Anteriorly, the knee is supported

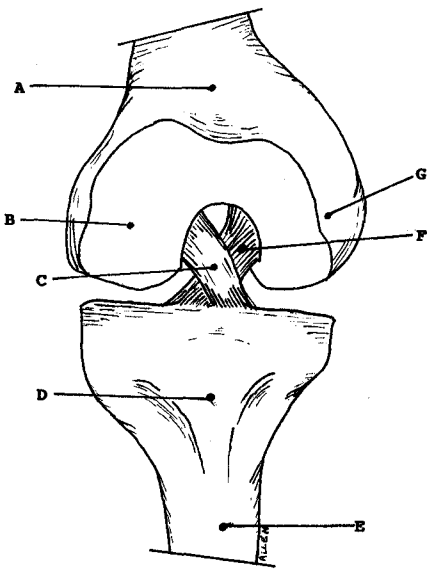

Figure 1. Right knee (anterior view). **A,** Femur; **B,** Lateral femoral condyle; **C,** ACL; **D,** Tibial tuberosity; **E,** Tibia; **F,** PCL; and **G,** Medial femoral condyle.

by an extension of the quadriceps femoris tendon, which encloses the sesamoid patella as it inserts on the tibia.[1] The patella is triangular in shape, with its base superior and apex inferior.[4] The joint capsule, lined with synovium, gives rise to the menisci and produces fluid to nourish and lubricate the knee's internal structures.[1]

Cruciate ligaments are intra-articular but extrasynovial.[4] The ACL extends from the anterior intercondylar fossa to the posteromedial aspect of the lateral femoral condyle. Conversely, the posterior cruciate ligament (PCL) originates in the posterior intercondylar fossa and inserts anteromedially on the medial condyle (Figure 1).[1] Norwood and Cross (1979) described the ACL as three bundles: anteromedial, intermediate, and posterolateral.[1] Last, the ligaments of Humphry (anterior) and Wrisberg (posterior) enwrap the PCL.[1]

The ACL and PCL restrict backward and forward motion, rollback, and rotation of the tibia on the femur, and function as the axes around which rotary movement occurs.[4] The ACL has one-half the tensile strength of the PCL, and ACL tension is least at 40 degrees to 50 degrees flexion.[1] Noyes et al have shown the ACL to account for 85% of the resistance to anterior draw, and is therefore the primary anterior stabilizer.[5]

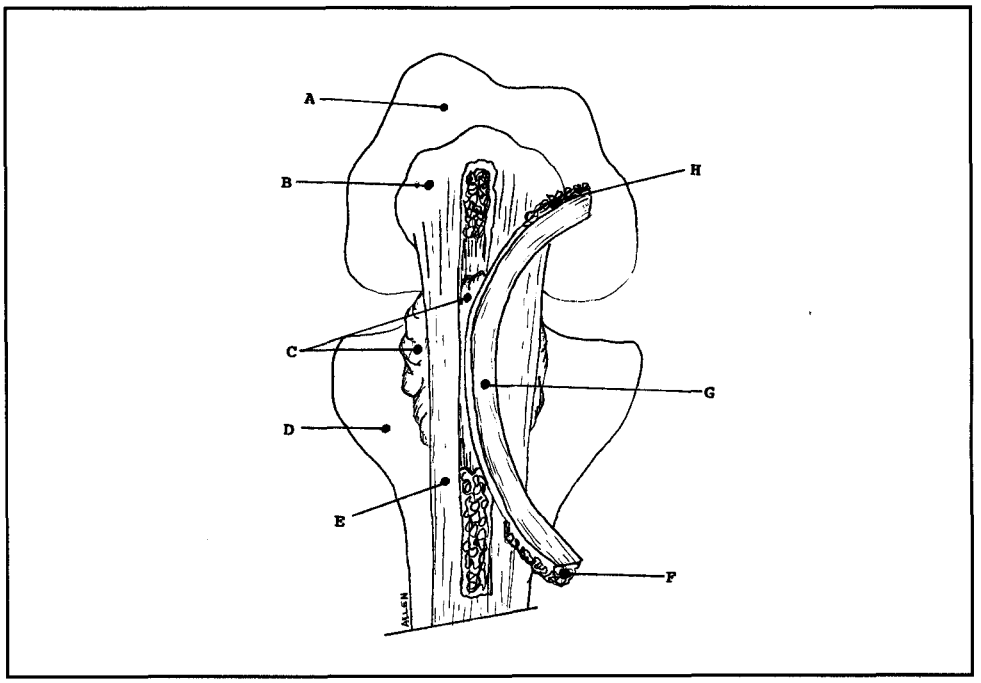

Figure 2. Right knee (anterior view). **A,** Femur; **B,** Patella; **C,** Fat pad; **D,** Tibia; **E,** Patellar tendon; **F,** Tibial bone block with holes; **G,** MPT graft; and **H,** Patellar bone block with holes.

Diagnosis

ACL rupture is arguably the most often undetected lesion in acute knee injury, as proper diagnosis can be difficult due to post-traumatic conditions.[1] Localized pain, a limited range of motion, swelling, and general knee instability may be common following injury.[1] The patient's description of the incident, however, can aid in establishing the mechanism of the disorder.[5] For example, one may have heard an audible "pop" or experienced sudden buckling of the joint while skiing. The knee's position and the direction and extent of force applied are most informative in this regard.[1] Mechanisms for injury of the ACL are numerous and include deceleration, hyperextension, internal rotation, and trauma.[5]

Tearing of the ACL's bundles occurs when the elastic limit of the ligament has been breached.[5] Commonly, the ACL is amputated.[6] In children, the ACL is often seen with a bony avulsion from the tibia, but rarely is such avulsion from the femoral condyle present in any age group. Presence of hemarthrosis also suggests cruciate rupture, whereas a non-bloody effusion is usually noted with degenerative menisci.[2] It is not uncommon for ACL ruptures to be associated with or caused as a result of meniscal tears and other collateral ligamentous deficiencies.[6]

Proper evaluation of the knee may require anesthesia, and both extremities should be examined for comparison.[5] The uninjured knee is examined first to establish baseline readings.[1] Manipulation of the knee includes "stressing" to assess joint instability, which is classified as either one-plane, rotary, or as a combination of both.[1]

ACL rupture is arguably the most often undetected lesion in acute knee injury, as proper diagnosis can be difficult due to post-traumatic conditions

Stress testing incorporates several maneuvers including abduction or valgus stress, adduction or varus stress, the posterior draw, the anterior draw, and Lachman's test. An anterior "draw sign" of 6 mm to 8 mm greater than that of the other knee is expressive of ACL rupture.[1] Rotary stress tests are also employed and expression of a positive "pivot shift" is most indicative of ACL deficiency.[1]

Finally, commercial stress arthrometers, arthrography, ultrasonography, computed tomography (CT), and magnetic resonance imaging (MRI) have all been useful in determining ACL status.[5] However, MRI studies reveal a higher degree of accuracy associated with PCL analysis than with the ACL analysis.[3]

Considerations

ACL rupture has been called "the beginning of the end for the knee," and this has been observed repeatedly in practice.[1] Therefore, the ACL's integrity should be reestablished when technically feasible.[1] Patients who limit activity (ie, no running, jumping, etc.) can do well without an ACL repair.[6] Few athletes, however, could function fully without an ACL, especially in sports requiring quick deceleration or directional changes.[1]

The primary indication for ACL reconstruction is laxity that results in functional disability.[6] An absolute con-

traindication for ACL reconstruction with the patellar tendon is open epiphyses. Other contraindications include previous infection, advanced osteoarthritis, metabolic disease, and old age.[5]

Preoperative considerations include the patient's state of health, age, associated intra-articular and capsular injuries, recreational activities, and demands of work.[1] The patient's motivation is of particular importance because knee surgery is painful and (s)he must be willing to undergo stringent rehabilitation.[5]

Comparative Graft Types

Although the focus of this paper is the mid-third patellar graft with attached tibial and patellar bone (MPT), the variety of grafts used in ACL reconstruction warrants mention. Surgeons have utilized gracilis, semitendinosus, and lateralis fascia grafts, among other substitutes, both separately and in combination, to reconstruct ACLs.[1] Attempts have incorporated braided or tubed, and free or attached grafts.[3] Techniques for graft placement vary from extra-

ACL rupture has been called "the beginning of the end for the knee," and this has been observed repeatedly in practice.

articular methods to the intra-articular procedure presented here, and a combination of both.[1] Graft fixation also varies considerably. Interference screws, staples, cortical screws and spiked washers, "endobuttons," and plastic buttons are all used with success.[3] Bioabsorbable screws have been developed to eliminate the need for future screw removal.[1]

The most important factor considered in all graft usage is ultimately graft strength.[5] In 1983, Noyes et al studied maximum loads for various grafts and found that only the MPT could meet and surpass the load requirements of the ACL.[1] Cadaveric MPT allografts have been very successful and demonstrate excellent revascularization and strength.[3] Synthetic grafts, on the other hand, are subject to mechanical fragmentation and synovitis, and cannot be repaired.[1]

The Surgical Experience

The following procedure is a composite of current research and the author's personal operating room experience. For this discussion, arthroscopic ACL reconstruction of the right knee using a 10-mm MPT graft with interference screw fixation is presented. Associated joint dysfunction (eg, a meniscal tear) is not addressed, and all subsequent intra-articular surgery is observed arthroscopically. Required instrumentation includes arthroscopy and arthrotomy kits, a power drill and sagittal saw, and the ACL-specific instrumentation.

Preoperative Considerations

Preoperative protocol includes same-day admittance, charting and site preparation in the preoperative area, and subsequent transfer to the operating room. The patient is placed in the supine position on the operating table. The patient's arms and left leg are secured and a cautery pad is applied. A tourniquet cuff is placed high on the patient's right thigh and a lateral post is secured to the frame of the table at a point adjacent to it. (This post is only used to better visualize the medial compartment during arthroscopic examination.) A sandbag is taped to the tabletop to support the right foot and, consequently, to hold the operative leg in a position where the hip is flexed to 45 degrees and the knee is flexed to 90 degrees.[1]

The patient is inducted with general anesthesia and the knee is again "stressed" to reaffirm diagnosis. The entire leg is then prepped to the cuff and draped free using an impervious stockinette and an extremity drape with effusion pouch. All required lines (light cord, inflow and outflow tubings, camera, suction, electro-driven chondrotome, and cautery) are secured to the field and connected to their respective equipment. A pump is used to regulate flow of the distention medium and to monitor internal joint pressure.

Graft Harvest

With the leg supported by the footholder, the knee's landmarks are identified and incision points are infiltrated with a local anesthetic containing epinephrine. The skin is incised at the midline of the anterior knee from the inferior pole of the patella distally 8 cm to 10 cm to the tibial tuberosity.[1] Blunt dissection,

The primary indication for ACL reconstruction is laxity that results in functional disability.

cautery, and retraction are used to clean the patellar tendon of soft tissue, from its tibial insertion to the superior pole of the patella. The prepatellar bursa is entered but the retinacular tissue is left intact for subsequent closure.[5]

The edges of the tendon are identified, the overall width of the tendon is measured, and the middle third portion of the tendon is marked. Ideally, graft width will be 10 mm to 12 mm.[1] A special knife with two blades set 10 mm apart is introduced at a 90-degree angle through the tendon, but not into the joint space, at a point just below the inferior pole on the patella. Care is taken not to disturb the underlying fat pad.[5] Next, the knife is drawn distally to the tibial metaphysis, creating parallel cuts in the tendon. A blunt elevator is then slid under the tendon to assure complete incision.

The parallel cuts are extended proximally 25 mm through the patellar

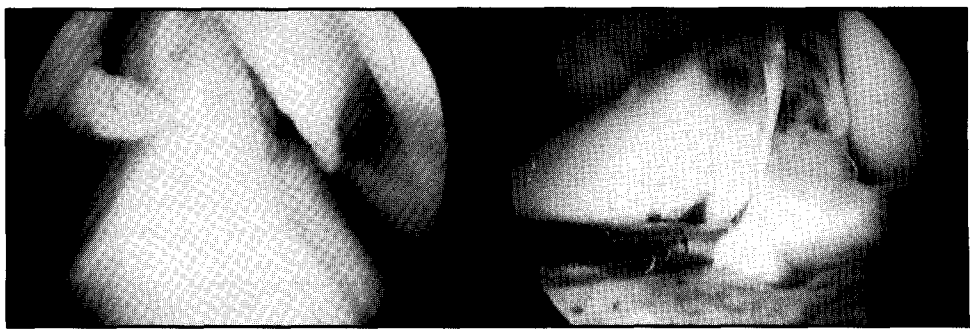

Figure 3. Arthroscopic view of knee. **A,** Normal ACL; **B,** Ruptured ACL.

aponeurosis and distally 30 mm onto the tibia, and connected terminally.[1] A sagittal saw, with a 9-mm "stop guide" blade, is used to cut the bone blocks. The cuts are made to the stop at a slight midline angle, following the soft tissue incisions.[6] Two 2-mm holes are drilled in each plug to accommodate the passing suture.[5] The trapezoidal bone plug is then carefully "popped" from its bed using a small curved osteotome.[1]

The tibia is approached first.[6] After delivering the bone plug, the surgeon manipulates it and releases any soft tissue attachments at the tibia. The tendon is elevated and the fat pad is dissected from it. A moistened sponge is wrapped around the tendon and tension is applied distally to the graft. A Richardson retractor is slipped under the proximal skin incision and gently levered against the superior pole, delivering the patella into the wound.[1] The proximal bone plug is harvested with considerable care taken to prevent a fracture to the patella. Soft tissue attachments are cut and the graft is freed (Figure 2).[1] Absorbable gelatin is packed in the patellar and tibial defects after which the surgeon's attention turns to arthroscopy.

Arthroscopic Examination

A thorough arthroscopic examination is made of the knee to assess other tissues for damage or degeneration and to confirm ACL rupture (Figure 3). The arthroscope is introduced through an anteromedial portal. Instruments enter the joint through a portal made within the confines of the initial skin incision. Inflow and pressure-sensing is accomplished through the arthroscope sheath, and the outflow cannula is positioned in the suprapatellar space.

Note: The surgeon commonly performs notchplasty, debridement, and tunnel drilling while the assistant prepares the graft.

Notchplasty and Debridement

Notchplasty is not always necessary, but it is performed to some degree in nearly all patients.[5] This procedure usually requires the application of the tourniquet, but cases have proceeded without taking this measure. The goal of notchplasty is to prevent graft impingement in the intercondylar notch when the knee is extended or flexed (Figure 4).[6]

Generally, notchplasty is performed with a chondrotome utilizing a 5.5-mm full-radius blade and 5.5-mm abrading burr. A gouge or curette may also be used. The lateral notch is usually widened, and ultimately an anteromedial gap of 2 mm to 3 mm should exist between the femur and the tibia with the knee extended.[1] Proper notchplasty requires probing of the posterior extent in order to accurately place the femoral tunnel guide.[5]

Debridement of the tibial ACL stump is also routinely performed, which exposes the tibial spine and PCL for precise positioning of the tibial tunnel guide.[1] Resection of the ligamentum mucosum and flagellate synovium may also be necessary to provide better visualization of the intercondylar notch. Any bleeding during this phase is controlled by intra-articular cautery.

Graft Preparation

The assistant, often a specially trained surgical technologist, prepares the graft at a separate table. The goal is to create a smooth graft by resecting the bone plugs to fit into a round (barrel) sizer that mimics the drilled tunnel. Excess cancellous bone is carefully nibbled off with a rongeur and saved to later fill the patellar/tibial defects. Further shaping is possible using the rough surface on the sizer. Each bone plug is also tapered proximally to facilitate passing the graft.[6] Depending upon bone quality, the graft may be reversed for implantation.

The tendon is cleaned of fat and shredded fibers. The assistant makes every effort to ensure that the tendon's attachment to the bone is intact. A No. 5 non-absorbable suture is placed through each hole in the bone plugs.[1] A purple mark is then drawn around the graft at the distal end of the femoral plug to use as a guide during passing of the graft. Once the graft passes smoothly through the 10-mm sizer, it is ready (Figure 5). The MPT is moistened throughout preparation and is wrapped in an antibiotic-soaked sponge until passing. The entire graft will be approximately 120 mm long.[6]

The most important factor considered in all graft usage is ultimately graft strength.

Note: A tension board may be utilized to hold the graft during preparation and "under load" prior to implantation.[2]

Drilling the Tunnels

Guide pin placement and tunnel drilling are often performed by the surgical technologist while the surgeon holds the positioning guides. The tip of the tibial guide is introduced into the joint and positioned on the tibial spine immediately anterior to the PCL (Figure 6). This guide is set at an angle that accommodates the graft length. The barrel of the guide is pressed against the anterior tibia at a point just medial to midline; this should allow for a tunnel through the tibia, which is in line with the femoral tunnel zone.

A 9-in., 2.4-mm guide pin is drilled up the barrel of the guide and is observed to ensure that it exits the tibial metaphysis. If the surgeon is satisfied with pin placement, the guide is disas-

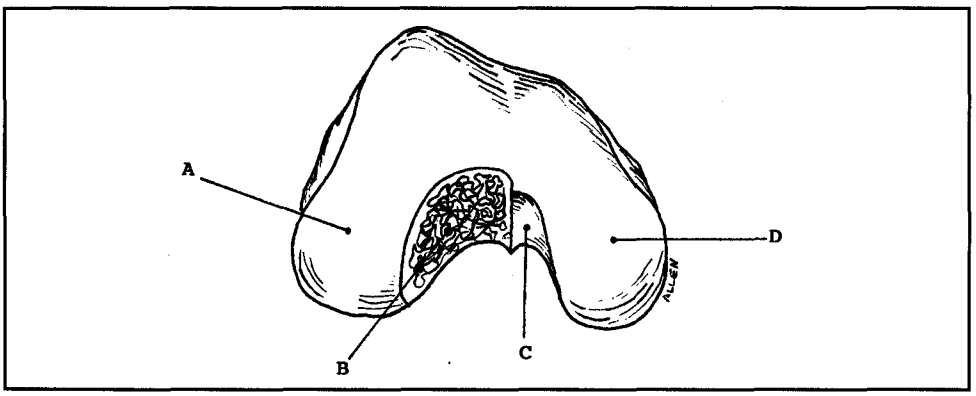

Figure 4. Anterior view of right femur. **A,** Lateral condyle; **B,** Resected medial/posterior surface of lateral condyle; **C,** Normal lateral notch surface of medial condyle; **D,** Medial condyle.

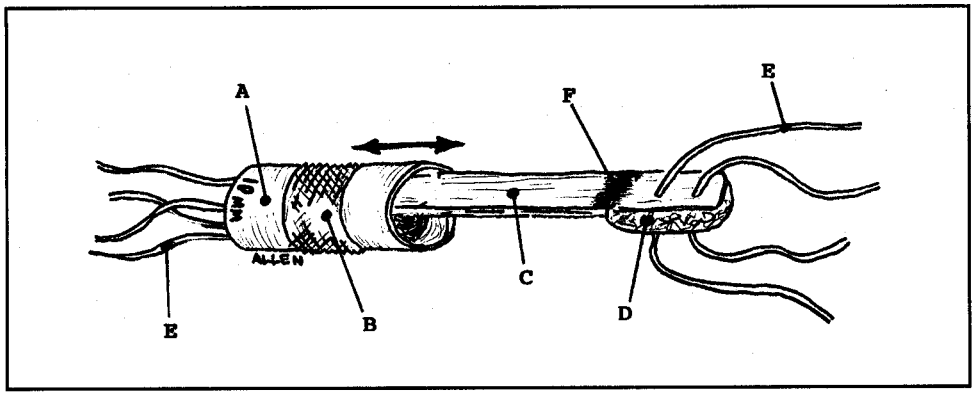

Figure 5. The prepared MPT graft. **A,** 10-mm sizer; **B,** Rough surface; **C,** MPT; **D,** Femoral bone block; **E,** No. 5 nonabsorbable suture; and **F,** Purple mark designating end of bone block.

sembled and removed. The knee is then extended and the position of the pin is observed (Figure 7). A curette is placed over the pin tip to prevent its advancement into the joint as it is over-reamed with a 10-mm cannulated drill. Any discharged bone is collected and saved.[5] The pin and drill are then withdrawn and the hole is temporarily plugged to prevent fluid loss.

With the knee extended, a femoral guide is introduced up the tibial tunnel to an "over-the-top" position in the notch (Figure 8).[3] The knee is then flexed to 45 degrees, and a 15-in., 2.4-mm trocar-tipped guide pin, with eyelet, is passed into the femoral guide and slowly advanced through the femur, quadriceps, and skin. A 10-mm, cannulated and calibrated, mushroom-head drill bit is now guided over the pin and drilled approximately 5 mm into the femur. It is then withdrawn and the imprint is inspected to assure a solid tunnel wall (Figure 9). The drill bit is again advanced until a tunnel, approximately 30 mm long, has been created, with care taken to prevent penetration of the anterolateral cortex of the femur.[1] The drill is now withdrawn, leaving the guide pin in place. All tunnel edges are chamfered to eliminate roughness that can harm the graft or complicate its passing.[5]

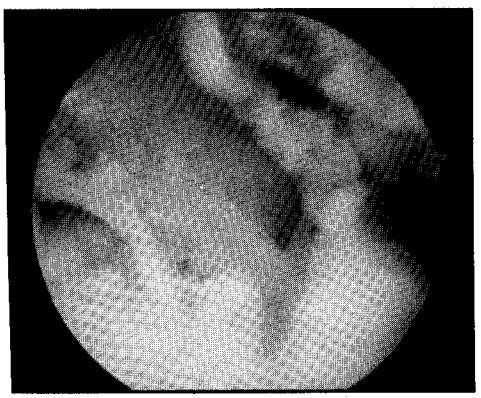

Figure 6. Tibial guide in position against PCL (anterior view).

Passing the Graft

Passing the graft is a coordinated effort requiring both intra-articular and extra-articular guidance to assure proper seating and rotation of the graft in the tunnels.[5] The sutures on the femoral plug are threaded into the guide pin eyelet, which lies outside the tibial tunnel. The assistant pulls the pin by its tip until the pin and suture ends exit the skin. A steady, gentle pull is maintained on these sutures as the graft is guided into place (Figure 10). The femoral plug is pulled into the tunnel to its purple mark, which is there to prevent under/over graft advancement, while the tibial plug is wiggled into the tibial tunnel.

Fixating the Graft

With tension maintained on the femoral sutures, the knee is fully flexed.[5] A straight, blunt probe is introduced along the femoral tunnel/plug junction to create a pilot screw hole and to determine screw length/width. A flexible guide wire replaces the probe, and the interference screw is advanced over it. (This screw has a disposable plastic sheath to hamper damaging the PCL or graft during insertion.)

Note: Screw insertion is a delicate matter since the screw cannot diverge or converge along the bone plug, but must be implanted parallel to it.[7]

Once the femoral screw is in place, the tibial sutures are held under tension and the knee is "cycled" (repeatedly flexed and extended).[1] During cycling, the distal end of the tibial bone plug is felt to note its excursion, and reflectively the MPT's excursion, which should not exceed 2 mm.[6]

The leg is now brought to approximately 45 degrees flexion and the tibial screw is inserted.[1] Bone lying outside the tibial tunnel is resected and saved. Again, the knee is cycled, and observed arthroscopically, to assess both graft integrity and lack of impingement (Figure 11).[6] Once satisfied, the surgeon removes the arthroscope and flushes the joint with antibiotic solution. The absorbable gelatin is removed and the salvaged bone is packed in the harvest areas.

Equipment is removed from the field, an 1/8-in. drain is inserted in the joint space, and the midline incision is closed with 0, 2-0, and 3-0 absorbable sutures. One end of each femoral passing suture is cut at the skin and the remaining length is pulled out. Portals and skin are closed with staples. A soft dressing is applied and the joint is wrapped in a cold-compress device. The drapes are removed and the knee is then immobilized in a long-leg controlled-motion brace.[1] A postoperative x-ray film is often taken to document screw placement.[6]

Postoperative Care

The patient is extubated and transported to recovery, where (s)he remains for approximately 2 hours. The patient leaves the hospital assisted and on

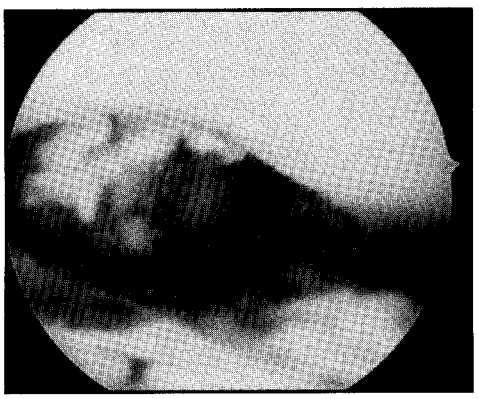

Figure 7. Checking tibial pin position with knee extended (anterior view). (Note the gap between femur and tibia.)

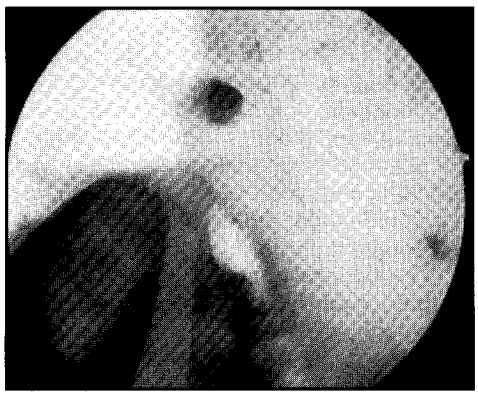

Figure 8. Femoral guide in position and guide pin imprint (anterior view).

crutches, with strict instructions for care that must be followed. A postoperative visit is scheduled for 7 to 10 days after surgery.[5]

Complications

Complications related to arthroscopy are relatively rare, but generally include articular damage by instruments, burns by light cords, and neurovascular injury caused by injudicious portal placement.[8] During lengthy procedures, tissue extravasation may also occur.[6] Most cases of infection are associated with poorly sterilized instruments.[8]

On the other hand, problems specific to ACL reconstruction are numerous. The procedure's technical demands dictate stringent adherence to guidelines.[1] Consequently, graft failure, the worst possible complication, may occur for a number of reasons.[5] Improper graft selection or preparation is arguably the primary cause.[1] Failure of the graft to revascularize also decreases its strength considerably, making the graft subject to tearing.[5]

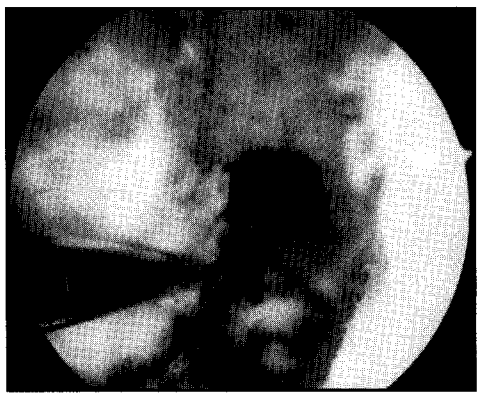

Figure 9. Drilling of femoral tunnel showing guide pin, cannulated drill head, and probe protecting PCL (anterior view). (Note intact tunnel wall.)

The graft may also be poorly fixated. Care must be taken to ensure proper alignment and implantation of the fixation device.[7] It is equally important to select the proper fixation method for the graft used.[5] Poor graft fixation, or placement, can result in loss of isometry, exposing the graft to unnatural forces that can ultimately cause complications.[1] Insertion of interference screws can also cut and weaken the graft if improperly performed.[5]

Although cruciate ligaments are intra-articular, they are extrasynovial.[4] Reconstruction subjects the graft to the hostile environment of the knee and constant immersion in joint fluid.[1] In addition, failure to identify or correct associated joint disorders can substantially contribute to graft failure and other complications.[1]

Further complications include collateral articular or osseous damage during drilling or notchplasty, infection, adhesions, ankylosis, residual or recurrent joint laxity, fracturing of the tibia or patella, and hemarthrosis.[1] The most common complication is patellar pain.[5]

Rehabilitation

Noyes and Paulos (1981) described rehabilitation as consisting of five phases: maximum, moderate, and minimum protection, return to activity, and activity/maintenance.[1] Treatment is based upon individual circumstances, such as graft and fixation types, and the patient's compliance with instructions for care.[5]

Maximum protection begins immediately after surgery with brace application. The brace prevents the patient from flexing the knee and can be adjusted for definitive ranges of motion as rehabilitation progresses. Rehabilitative efforts are focused on restrengthening the hamstrings and quadriceps while protecting the healing graft.[6]

The patient is dependent upon the brace and two crutches for the first 6 weeks. Toe-touch weight bearing is allowed the first postoperative day.[1] In the first week, the patient performs active range of motion from 30 degrees to 60 degrees. Leg lifts performed under guidance and with the leg bent at 45 degrees, and passive patellar mobilization, is also permitted.[10] In week two, the brace is readjusted for a moderate 15-degree to 60-degree range of motion and active exercises are continued.[6]

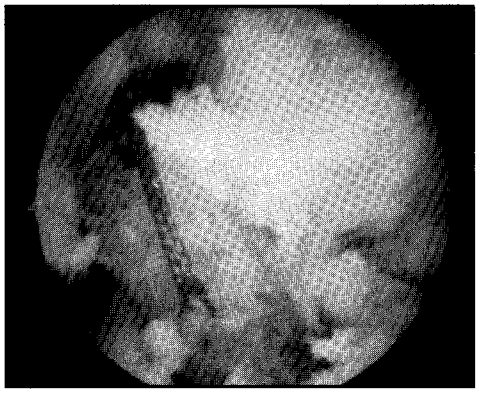

Figure 10. Passing the graft showing femoral plug and sutures (anterior view).

At week three, the brace is opened to 15 degrees to 90 degrees and the patient is allowed to bathe without it.[5] Active motion from 45 degrees to 90 degrees and patellar mobilization is allowed. During the fourth week, 50% weight bearing is encouraged and the brace is set for 10 degrees to 120 degrees of motion.[6] By week five, full passive extension should be realized under minimal protection and gentle bicycling exercises begun.[5]

In week six, the use of the brace is discontinued for indoor activities, and partial weight bearing is permitted using one crutch. Cycling continues and swimming may be added to the regimen.[6] By week eight, full weight bearing is allowed, quadriceps exercises proceed through a full range of motion, and the brace is usually abandoned.[1]

Strength is tested in week 12 and slow, short jogging is allowed if quadricep and hamstring strength have

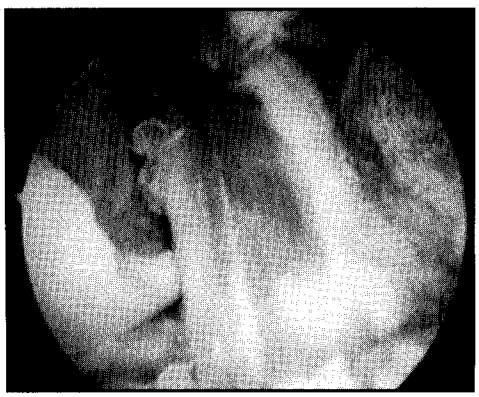

Figure 11. Reconstructed ACL (anterior view).

reached 85%.[6] The patient should not limp or have pain upon ambulation. Strength tests are repeated at 4 months to determine ability to return to running.[5] By 6 to 10 months, the patient should be able to resume athletics.[1] Even though a de-rotational brace is recommended for high-demand athletes, many have returned to playing without one and have done well.[6]

Once thought functionally insignificant, the ACL is now considered essential to normal knee function.

Conclusion

Once thought functionally insignificant, the ACL is now considered essential to normal knee function. This evolved attitude is evidenced by the variety of grafts and approaches developed in recent decades in an effort to properly reconstruct the ACL. Excellent results (with a modified Jones procedure) have been reported by Clancy.[1]

With the recent evolution of heightened athletic competition and expanded sports programs, more people than ever before are engaged in sports-related activities. As with most physical endeavors, bodily damage occurs and medical resolution is sought. Given the current statistics on injury, it is likely that the surgical technologist will have the opportunity to participate in ACL reconstruction. (S)he should be aware of the technical challenges inherent in such procedures as well as the opportunities afforded an interested professional.

Acknowledgements

The author wishes to express his appreciation to Mark Pohlman, MD, of New England Orthopaedic Surgeons in Springfield, Mass, for his support in the preparation of this article. The author would also like to thank Carol Broga, RN, and Andrew Grassetti, CST, of Baystate Medical Center, for their unwavering dedication to the acquisition of the arthroscopic photographs that appear in this article.

References

1. Crenshaw AH. *Campbell's Operative Orthpaedics*. 8th ed. St Louis, Mo: Mosby-Year Book; 1992;3:1535-1537,1546-1548,1565-1569,1621-1626,1692,1835-1837.
2. Wolf EM. "Endoscopic ACL Reconstruction Using Bone Patella Bone Graft." Largo, Fla: Concept, Inc.; 1990:6-10.
3. Burnett QM II, Fowler PJ. Reconstruction of the ACL: Historical overview. *Orthop Clin North Am*. 1985;16(1):144-151.
4. Zarins B. Arthroscopic surgery in sports medicine practice. *Orthop Clin North Am*. 1982;13(2):415, 418.
5. Feagin JA, Lambert KL, Cunningham RR. Repair and reconstruction of the anterior cruciate ligament. In: Chapman MW, Madison M, eds. *Operative Orthopedics* 1983; Philadelphia, Pa: JB Lippincott Co.; 3:1641-1649.
6. Kalenak A, Hanks GA, Sebastianelli WJ. Arthroscopy of the knee. In: Evarts CM, ed. *Surgery of the Musculoskeletal System*. 2nd ed. New York, NY: Churchill Livingstone, Inc.; 1990;4:3404-3432.
7. Tortora GJ, Grabowski SR. *Principles of Anatomy and Physiology*. 7th ed. New York, NY: HarperCollins College Publishers; 1993:208.
8. Marzo J, et al. Arthroscopic meniscal repair. *Am J Knee Surg*. Fall 1991:164.

Gary J. Allen, CST/CFA, *is employed at Baystate Medical Center in Springfield, Mass, where he specializes in orthopedic and thoracic surgery. A 10-year member of AST, Gary has written several articles for* The Surgical Technologist. *The author's experience in arthroscopy encompasses scrubbing on nearly 1,500 cases, including more than 150 ACL reconstructions of various types. Gary has served as the assistant on many of these procedures and has had the opportunity to prepare more than a dozen of the grafts illustrated in this article.*

Taking the CE Exams

To make the most of the continuing education exams that appear monthly in the journal, keep in mind the following suggestions:

- The test questions are taken directly from the continuing education article. Choose your answer based on the information presented in the article itself. Do not choose a response based on your personal experience.
- Continuing education exams are graded on a pass/fail basis. Examinees must answer 70% of the questions correctly to receive credit. If a question is deemed to be unclear or invalid, an incorrect answer will not be counted against the examinee's score.
- Continuing education exams must be submitted with payment. No answer sheet will be graded unless accompanied by a check or money order for the correct amount.
- Each month's exam need not be mailed separately. Exams and payments may be accumulated over several months and sent in one envelope. One check or money order can be submitted for multiple exams.